V SERIES

11½" I.D.

COXREELS® V Series spring driven and hand crank vacuum hose reels are available in both vacuum only and vacuum/pneumatic combinations. Both are designed to extract unwanted fumes, particles and by-products from your work area. The vacuum/pneumatic models have dual plumbing for vacuum extraction while simultaneously powering pneumatic tools such as grinders and sanders in an enclosed efficient system.

V SERIES

HOSE						LESS HOSE		SIZE INDEX
MODEL	DESCRIPTION	VACUUM INLET	VACUUM CAP.	VACUUM VAC. HP	APRX. LBS.	MODEL	APRX. LBS.	
V100 SERIES								
V-112H-730	Vacuum Only, Direct Crank	1½" - 2"Cuff	30' of 1¼" Vac hose	Less than 5HP	24	**V-112-730**	19	**1**
V-117H-835	Vacuum Only, Direct Crank	1½" - 2"Cuff	35' of 1½" Vac hose	Less than 5HP	35	**-**	-	**2**
V-117H-850	Vacuum Only, Direct Crank	1½" - 2"Cuff	50' of 1½" Vac hose	5HP or more	38	**V-117-850**	30	**2**

LESS HOSE							SIZE INDEX
MODEL	DESCRIPTION	VACUUM INLET	VACUUM CAP.	AIR INLET	AIR CAP.	APRX. LBS.	
V1175 SERIES							
V-1175-850	Vacuum Only, Direct Crank	1½" NPT	50'	-	-	118	**3**
V-1175-850-C	Vacuum Only, Bevel Front Crank	1½" NPT	50'	-	-	121	**4**
V-1175-850-T	Vacuum Only, Bevel Top Crank	1½" NPT	50'	-	-	121	**4**
VA-1175-850*	Vacuum & Air, Rim Rewind	1½" NPT	50'	½" NPT	50'	123	**5**
VA-1175-850-C*	Vacuum & Air, Bevel Front Crank	1½" NPT	50'	½" NPT	50'	126	**5**
VA-1175-850-T*	Vacuum & Air, Bevel Top Crank	1½" NPT	50'	½" NPT	50'	126	**5**
V SERIES							
V-SLPL-825	Vacuum Only, Spring Rewind	1½" NPT	25'	-	-	102	**6**
VA-DLPL-825*	Vacuum & Air, Spring Rewind	1½" NPT	25'	½" NPT	25'	107	**7**

*VA models have dual plumbing for both vacuum & air applications, pneumatic swivel inlet is solid brass 1/2" NPT 300 PSI swivel

REEL DIMENSIONS

Technical Data Sheets Available On Website

SIZE INDEX	W	H	L	X	Y	Ø	Dw
1	23⅛"	13"	12"	14⅛"	6"	5½"	12½"
2	23⅝"	18"	17"	15"	6"	6¾"	13½"
3	24⅞"	26⅛"	24"	17⅛"	20¼"	10½"	11⅝"
4	22"	26⅛"	24"	17⅛"	20¼"	10½"	11⅝"
5	21¾"	26⅛"	24"	17⅛"	20¼"	10½"	11⅝"
6	17½"	24½"	26⅜"	15⅜"	25"	10½"	7½"
7	20⅛"	24½"	26⅜"	15⅜"	25"	10½"	7½"
	Overall Dimensions			Base		Drum	

V100 Series

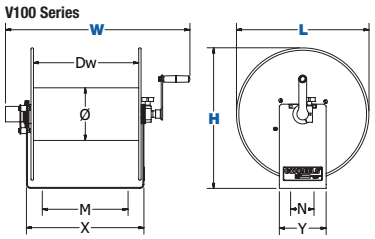

V Series

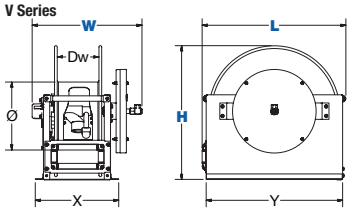

V1175 Series

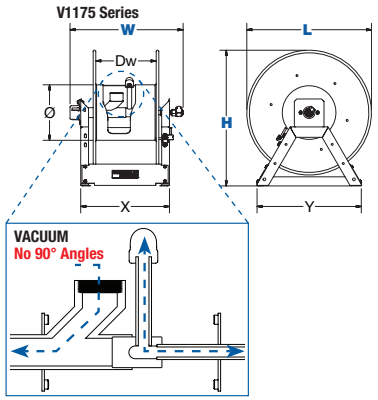

V SERIES :: REEL SPECIFICATIONS

V100 SERIES

- Direct hand crank reel with a solid one piece steel "U" shaped frame design
- Lightweight & compact design makes this reel the ideal solution for commercial vacuum systems
- Direct connect port for vacuum hose with bullet cuffs
- Adjustable tension brake to prevent "free-wheeling" during operation, transport or storage
- Swivel allows for the connection of 1½" and 2" hose on the inlet.

V1175 SERIES

- Sturdy all welded "A" frame base with a double supported steel axle
- Bevel gear hand crank (Removable handle for compact storage)
- Low profile outlet riser & open drum slot design, provide a non-crimping, flat smooth hose wrap

V SERIES

- Enclosed factory tuned & matched cartridge-style spring motor
- Sturdy box-style frame with heavy duty steel cross supports to all four corners for extra rigidity
- Low profile outlet riser & open drum slot design, provide a non-crimping, flat smooth hose wrap
- Self-lubricated flange bearings & multi-position lock ratchet
- Lubricated factory matched cartridge-style spring motor
- Heavy duty 1" O.D non-corrosive stainless steel rollers
- Cast iron lock ring with non-sparking bronze pawl

SIGNATURE FEATURES

- Professional grade heavy duty steel construction
- Durable proprietary CPC™ powder coat process
- Rolled edges & ribbed discs provide strength & safety
- Leading 2-year manufacturer's limited warranty
- Made in the U.S.A. - Sold & Supported Worldwide

POSSIBLE FIELDS OF APPLICATION

- Vacuum Operation
- General Industrial
- Manufacturing Plants & Facilities
- Maintenance, Repair & Operations
- Construction Sites

ACCESSORIZE YOUR REEL :: PG 56

- O-Rings & Swivels
- Roller Brackets
- Hoses
- Assorted Reel Accessories

WARNING: Cancer and reproductive Harm – See page 63 for more information – www.P65Warning.ca.gov